MERCURY (40 (2 CYL.))
Serial Nbr Range: 0P017000 THRU 0P325499 (BEL)

X-Long Components

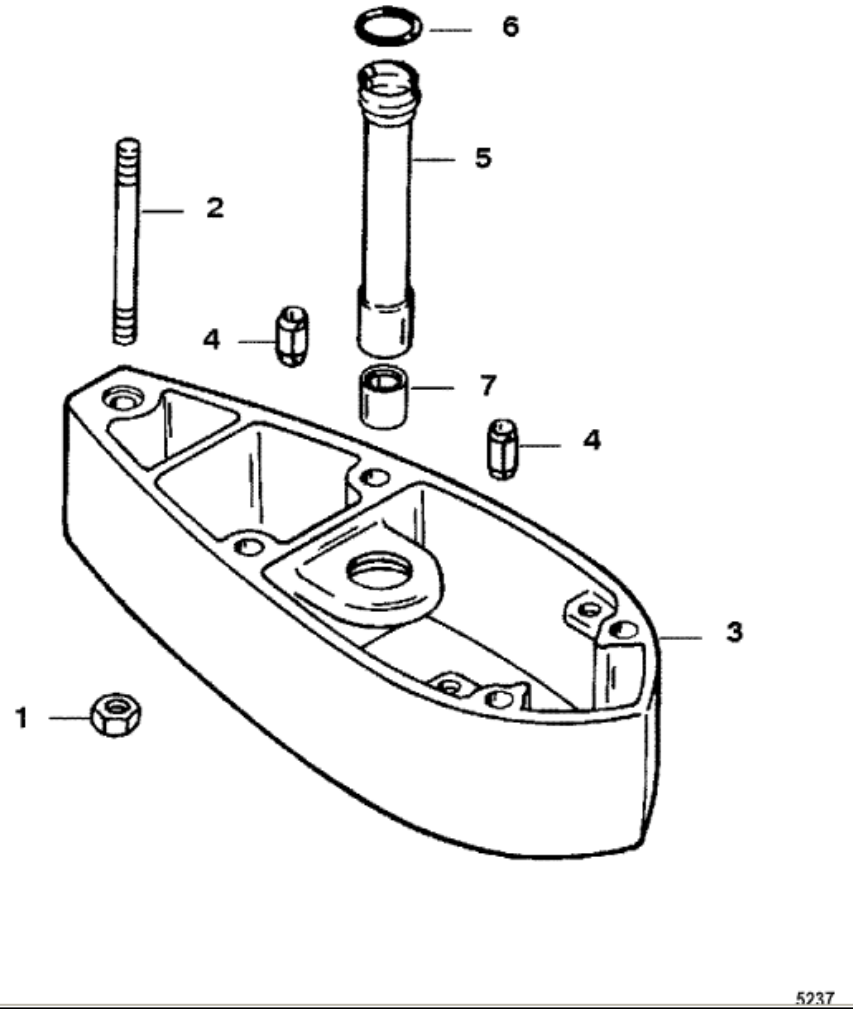

Parts List

Ref	Class	Part	Description	Qty	Comment	Footnote
1	11	40140	NUT, (M10)	4		
2	16	816866 5	STUD, (M10 x 130)	2/4		
2	16	816866 1	STUD, (M10 x 120)	4		
3		824072A 1	SPACER, Driveshaft Housing Exter	1		
4	17	821327	PIN, Dowel	2		
5		824082A 1	WATER TUBE ASSEMBLY, Exten:	1		
6	25	21836	O-RING, (.796 x .139)	1		2,15
7	26	824084	SEAL	1		15
-		823547A 2	SEAL KIT	1		